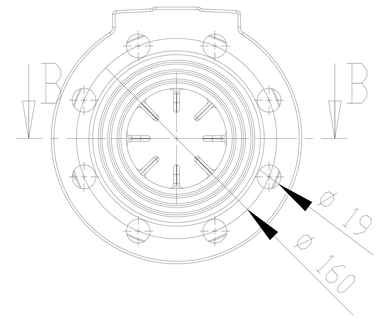

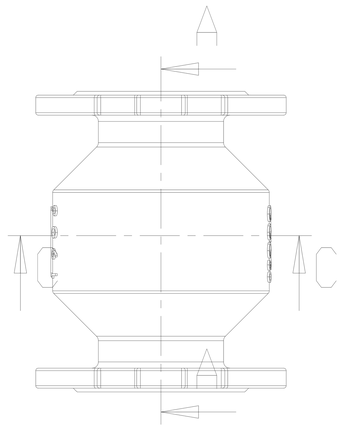

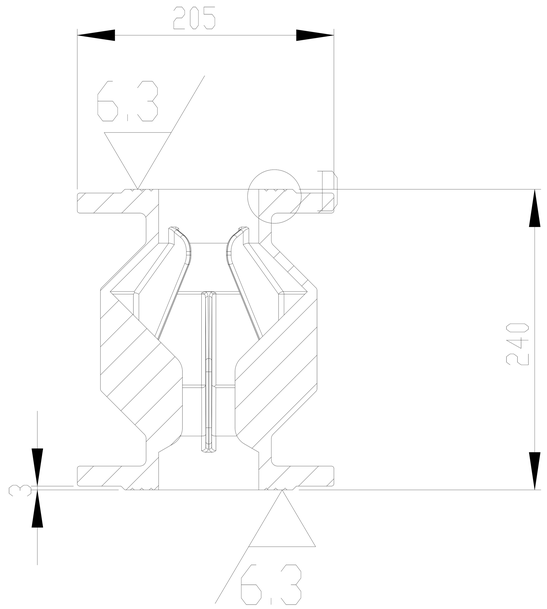

剖面 A-A

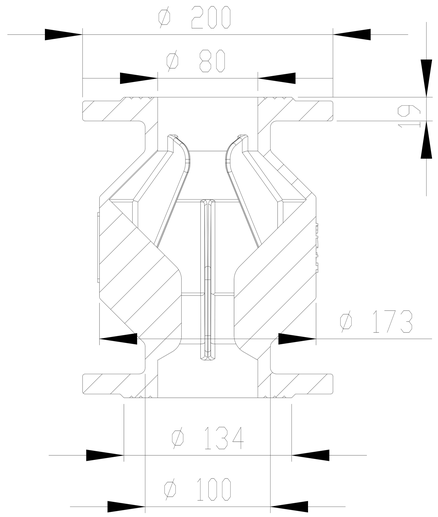

剖面 B-B

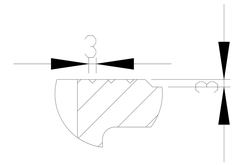

局部视图 D
比例 2 : 5

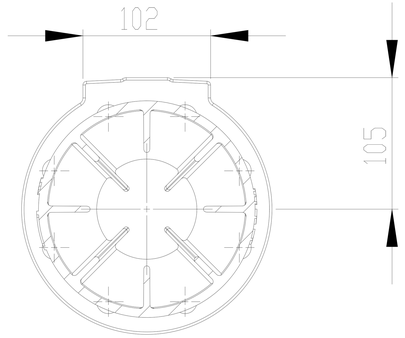

剖面 C-C

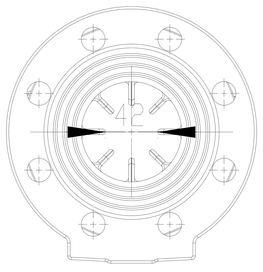

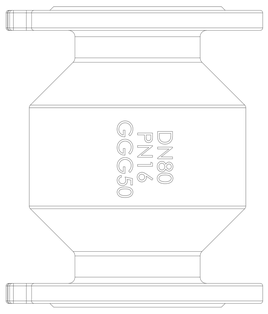

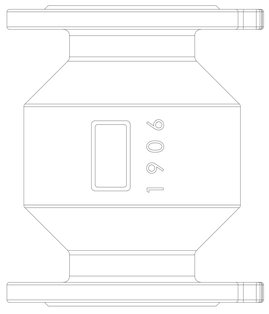

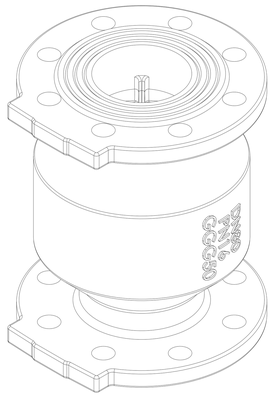

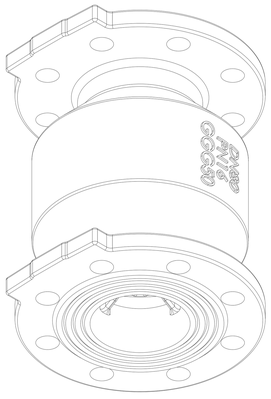

UNLESS OTHERWISE SPECIFIED: DIMENSIONS ARE IN MILLIMETERS SURFACE FINISH: TOLERANCES: LINEAR: ANGULAR:	FINISH:			DEBUR AND BREAK SHARP EDGES	DO NOT SCALE DRAWING	REVISION
	NAME	SIGNATURE	DATE		TITLE:	
DRAWN						
CHK'D						
APPV'D						
MFG						
Q.A				MATERIAL: GGG50	DWG NO.	A3
				WEIGHT: 12.5Kg	SCALE:1:5	SHEET 1 OF 1