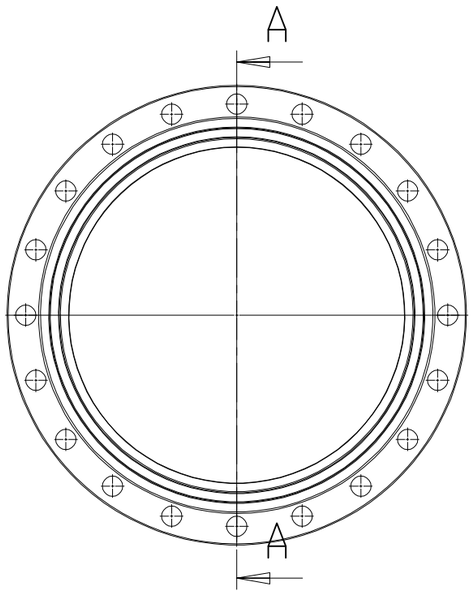

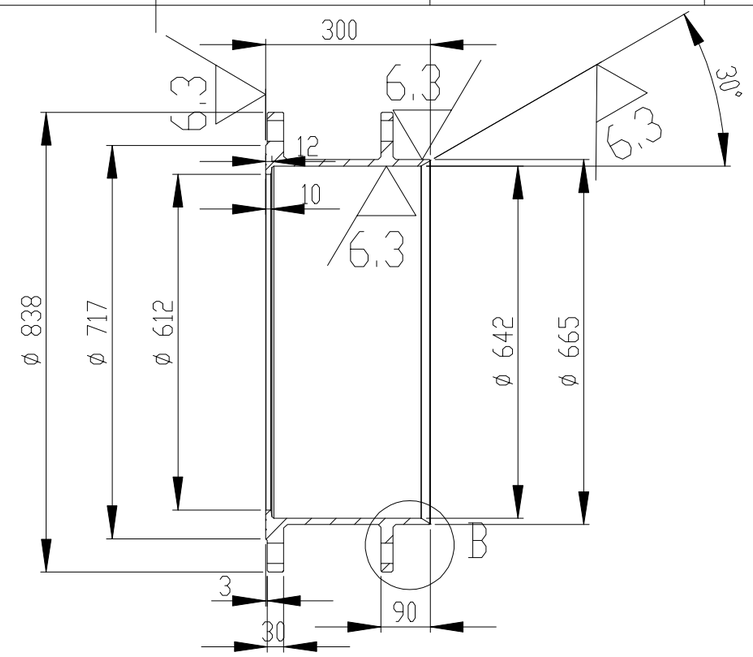

剖面 A-A

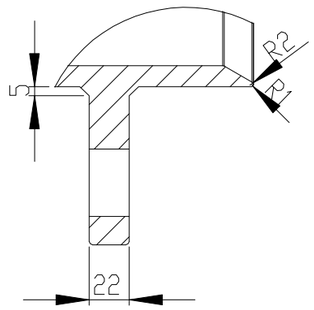

局部视图 B
比例 1 : 3

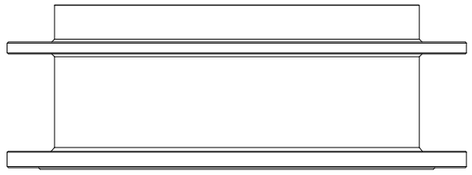

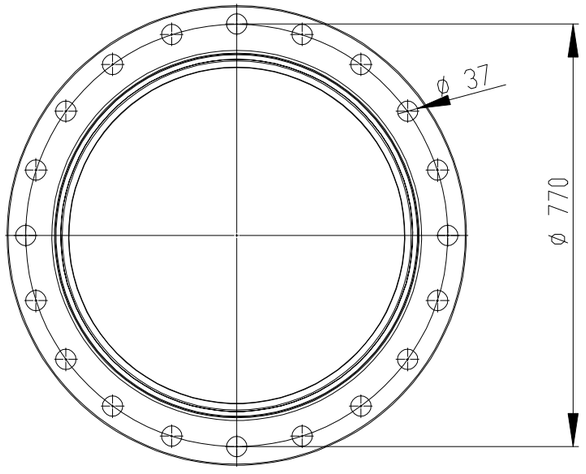

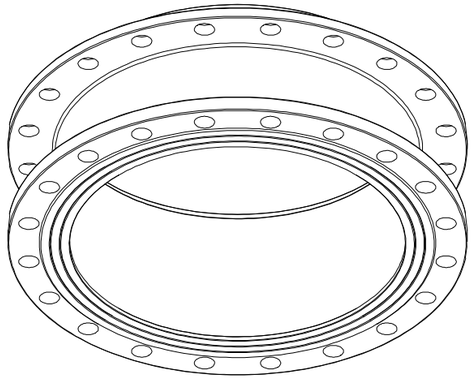

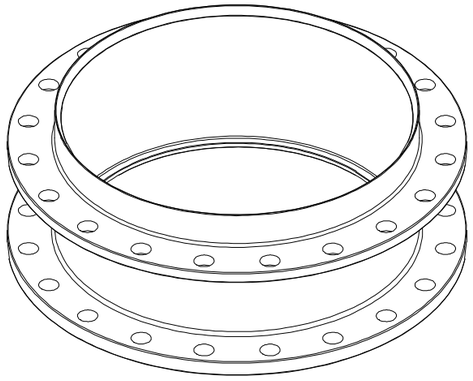

UNLESS OTHERWISE SPECIFIED: DIMENSIONS ARE IN MILLIMETERS SURFACE FINISH: TOLERANCES: LINEAR: ANGULAR:	FINISH:				DEBUR AND BREAK SHARP EDGES	DO NOT SCALE DRAWING / REVISION
	NAME	SIGNATURE	DATE			TITLE: DN600 PN16可拆卸双盘短体
DRAWN						
CHK'D						
APPV'D						
MFG						
Q.A				MATERIAL: QT450-10		DWG NO. A3
				WEIGHT: 净重：124.2Kg		SCALE:1:10 / SHEET 1 OF 1